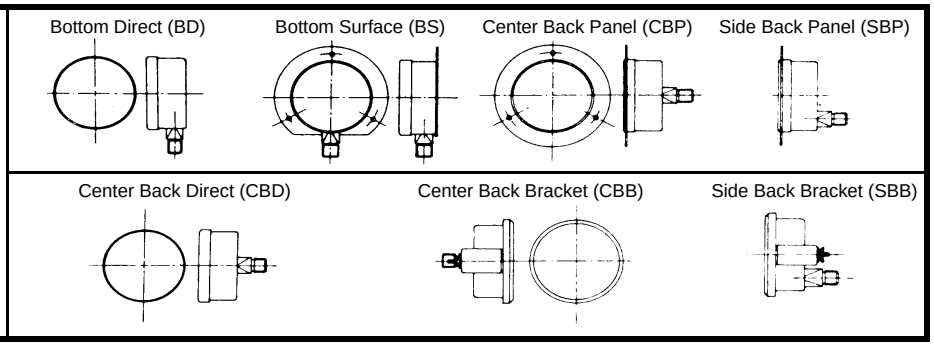

* **SPECIFICATIONS:**

SIZE	:	55MM, 68MM, 80MM, 100MM, 150MM
CASE	:	DRAWN STEEL STOVED ENAMELED BLACK
BEZEL	:	DRAWN STEEL STOVED ENAMELED BLACK / CHROME PLATED
SENSING ELEMENT	:	BOURDON 'C' SHAPED TUBE FOR RANGES UP TO 100KG/CM²
		COIL SHAPED TUBE FOR HIGHER RANGES.
ELEMENT MATERIAL	:	BRASS / COPPER ALLOY
SOCKET	:	SECTIONAL BRASS
MOVEMENT	:	BRASS
DIAL	:	TIN / ALUMINUM
		(WITH BLACK AND RED MARKINGS ON WHITE BACKGROUND)
POINTER	:	STEEL / ALUMINUM
		(BLACK FOR MEASUREMENT, RED FOR SETTING)
WINDOW	:	CLEAR, PLAIN GLASS
JOINT	:	HARD SOLDERED / BRAZED
TEMP. RATING	:	120°C
ACCURACY	:	±2% OF F.S.D.
OVER RANGE PROTECTION	:	UP TO 160/KG/CM² — 25% OF FULL SCALE
		ABOVE 160 KG/CM² AND UP TO 600 KG/CM² — 15% OF FULL SCALE
		ABOVE 600 KG/CM² — 10% OF FULL SCALE
PROCESS CONNECTION	:	1/4", 3/8", 1/2" BSP(M) / NPT(M)
RANGE	:	0-30 PSI, 0-60 PSI, 0-100 PSI, 0-150 PSI, 0-200 PSI
		IN SINGLE / DUAL / TRIPLE SCALE.
		COMBINATIONS OF PSI, BAR, KG/CM² OR OTHERS

OPTIONAL FEATURES:

SIZE	:	200MM, 250MM, 300MM
CASE	:	DRAWN STEEL POWDER COATED, STAINLESS STEEL, BRASS,
		CHROME PLATED BRASS
THREAD CONNECTION	:	1/8" AND 1/4" NPT AND M12 X 1.5 THREADS IN 55M AND 68MM SIZES
		1/4" AND 1/2" NPT AND M20 X 1.5 THREADS IN OTHER SIZES
ACCURACY	:	±1% OF F.S.D.
ACCESSORIES	:	BUILT-IN DAMPENER, EXTERNAL ADJUSTABLE DAMPENER, GLYCERINE-
		FILLED, 'U' / PIGTAIL SYPHON, GAUGE COCK
RANGE	:	NON-STANDARD RANGE ON REQUEST

SPECIAL APPLICATION GAUGES:

OXYGEN GAUGE, ACETYLENE GAUGE, AMMONIA GAUGE AND FREON GAUGE ON REQUEST

Notes / Remarks :

VIBRATION MANAGEMENT CORPORATION
5930 THOMAS ROAD,
HOUSTON - TEXAS 77041 , USA
Internet address:
www.vimco.biz

Project :
Client :
Consultant :
Representative:

Title : **PRESSURE GAUGES**

Drawing no.
S-2710.01

Rev. **1**